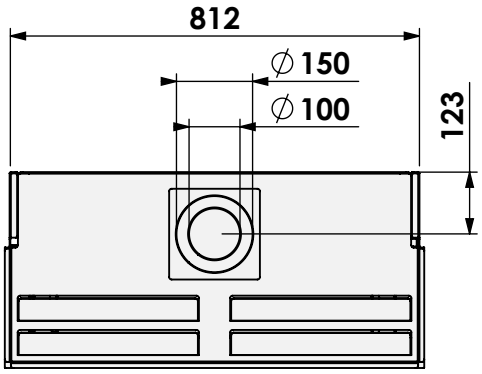

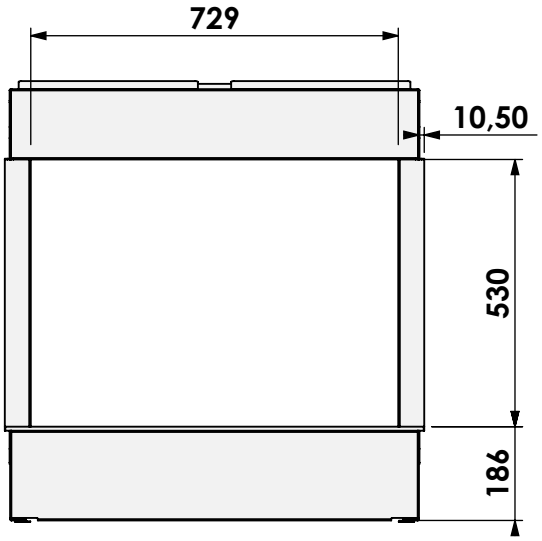

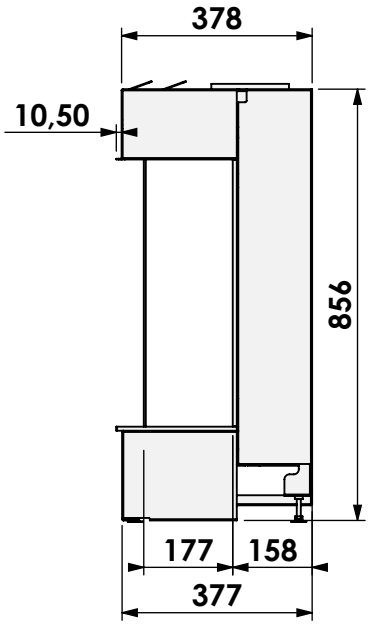

Barbas Bellfires B.V.
Hallenstraat 17
5531 AB Bladel
The Netherlands
www.barbasbellfires.com

Name:
Smart Bell Panorama 73-52

Modifications reserved

Projection: American

Scale: 1:15

Unit: mm

Version: 0